portablespace
cabin hire • sales • transport

portablespace WELFARE UNIT PS-500 (GAS GENERATOR 24' x 9')

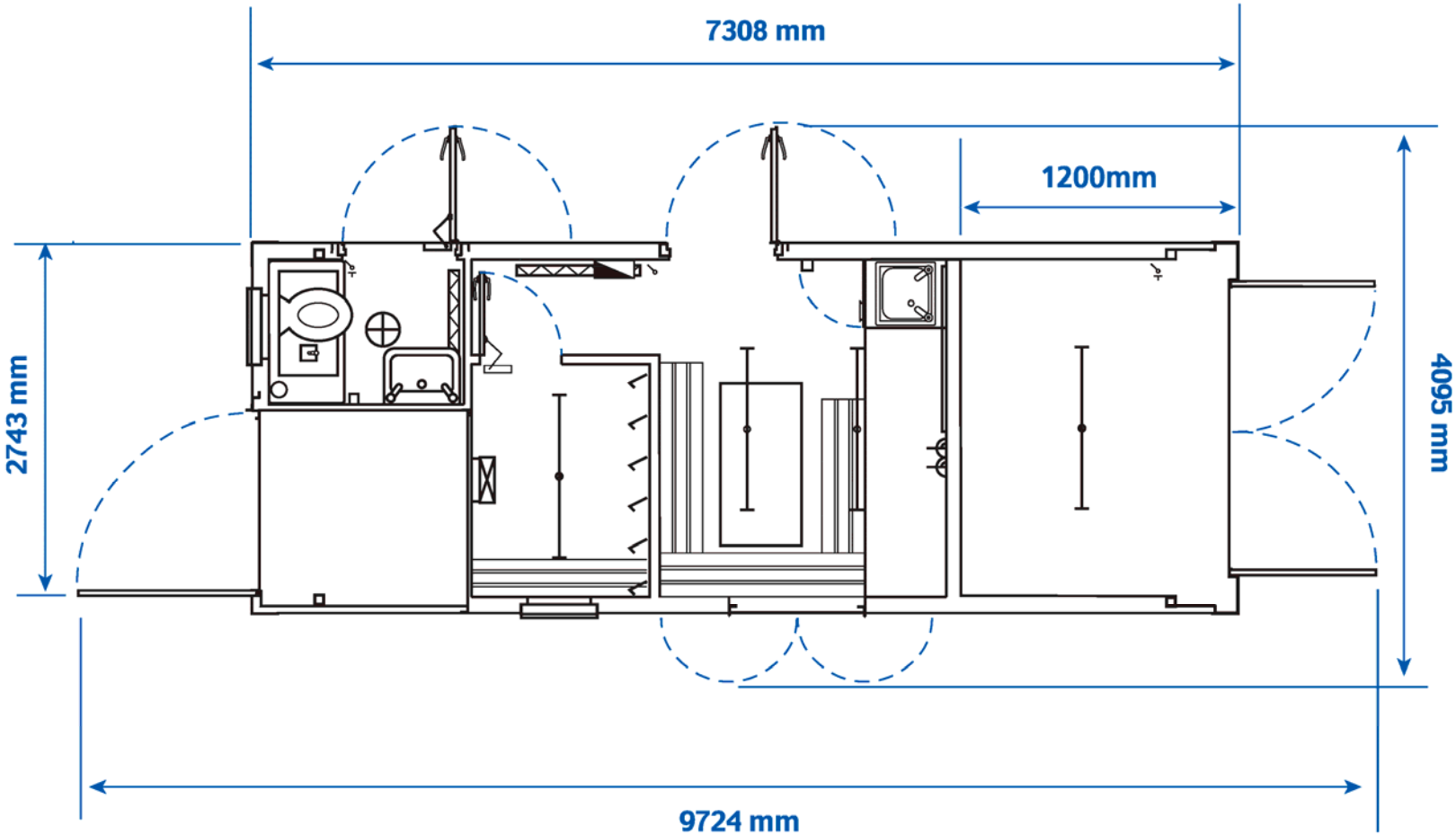

KEY

- CONSUMER UNIT
- 3' OIL FILLED RADIATOR
- 2' OIL FILLED RADIATOR
- NIGHT STORAGE HEATER
- TWIN SOCKET, 10000mm above F.F.L.
- 4' FLUORESCENT LIGHT
- BULKHEAD LIGHT
- LIGHT SWITCH
- LIGHT PULL SWITCH